FortiFone™ QuickStart Guide

for FON-870i

FortiFone™ QuickStart Guide for FON-870i

Revision 7
July 17, 2017

Copyright © 2017 Fortinet, Inc. All rights reserved. Fortinet®, FortiGate®, FortiCare® and FortiGuard®, and certain other marks are registered trademarks of Fortinet, Inc., in the U.S. and other jurisdictions, and other Fortinet names herein may also be registered and/or common law trademarks of Fortinet. All other product or company names may be trademarks of their respective owners. Performance and other metrics contained herein were attained in internal lab tests under ideal conditions, and actual performance and other results may vary. Network variables, different network environments and other conditions may affect performance results. Nothing herein represents any binding commitment by Fortinet, and Fortinet disclaims all warranties, whether express or implied, except to the extent Fortinet enters a binding written contract, signed by Fortinet's General Counsel, with a purchaser that expressly warrants that the identified product will perform according to certain expressly-identified performance metrics and, in such event, only the specific performance metrics expressly identified in such binding written contract shall be binding on Fortinet. For absolute clarity, any such warranty will be limited to performance in the same ideal conditions as in Fortinet's internal lab tests. In no event does Fortinet make any commitment related to future deliverables, features or development, and circumstances may change such that any forward-looking statements herein are not accurate. Fortinet disclaims in full any covenants, representations, and guarantees pursuant hereto, whether express or implied. Fortinet reserves the right to change, modify, transfer, or otherwise revise this publication without notice, and the most current version of the publication shall be applicable.

FortiVoice	fortivoice.com
Technical Documentation	docs.fortinet.com
Knowledge Base	kb.fortinet.com
Customer Service & Support	support.fortinet.com
Training Services	training.fortinet.com
FortiGuard	fortiguard.com
Document Feedback	techdocs@fortinet.com

Introduction

This guide describes how to set up your new FON-870i telephone. For more information, please see the *FON-870i User Guide* at docs.fortinet.com.

Installing the base station

Ensure you have an available PoE port on your network switch before continuing with this installation.

Connect the RJ45 cable from the network port on the base station to the PoE switch.

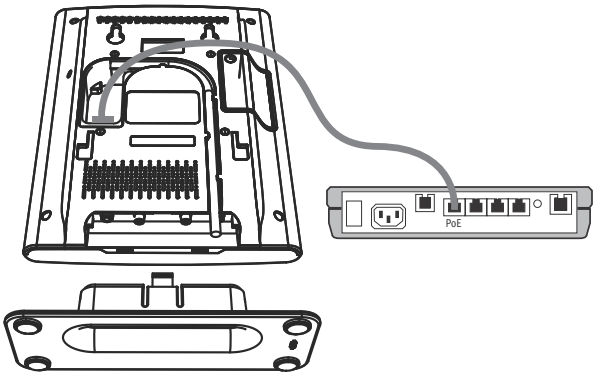

Installing the handset charger

1. Place the handset charger within 150 feet (50 meters) of the base. Concrete and metal objects might affect the signal range.
2. Connect the power adapter from the power outlet to the handset charger.

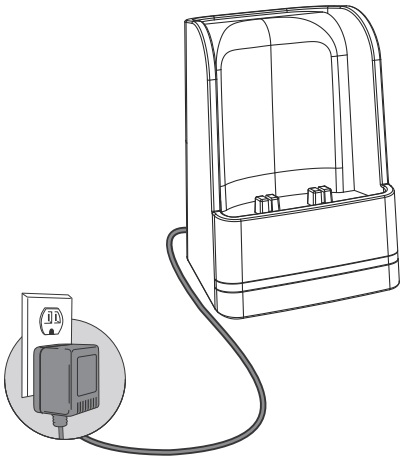

3. Remove the battery cover from the phone and insert the battery as shown in the illustration. Replace the battery cover.

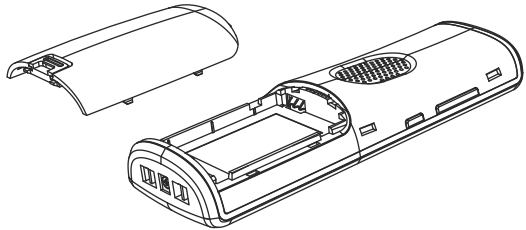

4. Place the handset in the charger. The blue light on the battery charger will turn on.

Ensure the phone is fully charged before using for the first time.

Registering the handsets

A standalone base can support up to 15 registered handsets with up to 10 concurrent calls.

Configure an extension for each handset in the phone system. For further details, see the FortiVoice admin/user guide at docs.fortinet.com.

For use as an internal extension

1. Press and use the *navigation* button to select *Connectivity*.

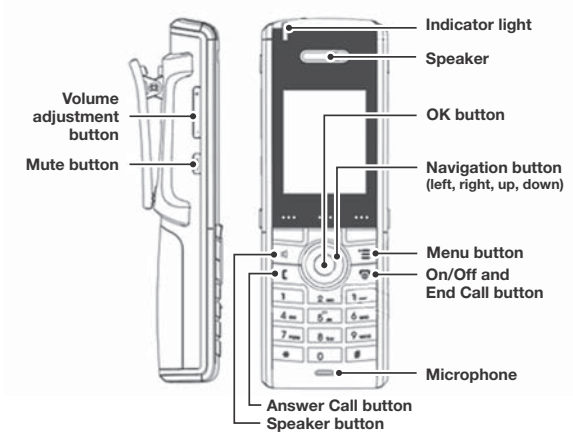

2. Select *Register* and select an empty slot.
3. Enter `0000` as the access code. Press *OK*.
4. After completing steps 1–3 for all handsets, reboot the base by pressing the *Reset* button. Once the base has finished rebooting, the phone will automatically register and display the name and extension number.

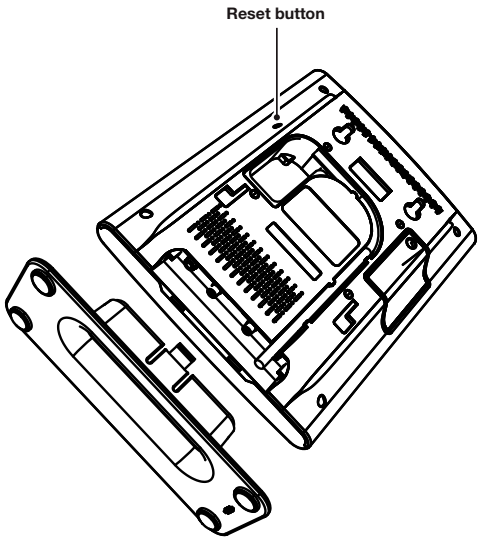

For use as an external extension

1. Press ☰ and enter ✱ 4 7 ✱. This will display the IP address of the base.
2. Using a browser, enter the IP address of the base.
3. Enter `admin` as the *User Name* and `23646` as the *Password*.
4. From the left hand menu, click *Management*.

5. Enter the public IP or FQDN of the FortiVoice system in the *Configuration Server Address* field.
6. Click *Save*.
7. Press ☰ and use the *navigation* button to select *Connectivity*.
8. Select *Register* and select an empty slot.

9. Enter `0000` as the access code. Press *OK*.
10. After completing steps 7–9 for all handsets, reboot the base by pressing the *Reset* button. Once the base has finished rebooting, the phone will automatically register and display the name and extension number.

Handset safety and certifications

Important safety information

Use only power adapter listed in the user instructions.

Charge the battery or handset only in combination with 870i DECT Handset Desktop Charger and the Ten Pao S008ACM0550060 adapter that comes with the product.

Plug the Ten Pao S008ACM0550060 adapter in a wall outlet socket near the equipment for easy access/removal of the AC/DC adapter.

Important battery information

CAUTION: Risk of explosion if battery is replaced by an incorrect type. Dispose of batteries according to the instructions. Use only battery listed in the user instructions.

ATTENTION: Risque d'explosion si la batterie est remplacée par un type incorrect. Jetez les piles usagées selon les instructions.

This product uses rechargeable Lithium-Ion batteries 3.7V, 1100mAh. Only use batteries that come with the handset or dedicated spare batteries marked with "Battery Pack, CE-MB206-5C-03 or RTR001F01". Do not use any other type, since this may present a risk of leakage, fire, explosion or other hazardous situation. For battery replacement or removal please remove the battery cover of the handset. Never disassemble, customize or short-circuit batteries. Do not place battery in fire or heat the battery. Charge battery only with 870i charger and the Ten Pao S008ACM0550060 adapter that comes with the product.

Sensitive electronic environment

Any radio-based equipment can potentially cause interference with other equipment and can be interfered from other equipment. This also applies for DECT equipment. However, due to the very low transmission power level, the chances for interference are very small. Research proves that operational DECT phones normally don't influence electronic equipment. However, some precautions must be taken into account for sensitive electronic equipment e.g. sensitive laboratory equipment. When DECT phones operate in straight nearness of sensitive electronic equipment incidental influence can appear. You are advised not to place the DECT phone on or close (less than 10cm) to this kind of equipment, even in standby mode. Please also use the other documentation supplied with the various parts of your telephone system.

Product disposal information

For countries in the European Union

The symbol depicted here has been affixed to your product in order to inform you that electrical and electronic products should not be disposed of as municipal waste.

Electrical and electronic products including the cables, plugs and accessories should be disposed of separately in order to allow proper treatment, recovery and recycling. These products should be taken to a designated facility where the best available treatment, recovery and recycling techniques are available. Separate disposal has significant advantages: valuable materials can be re-used and it prevents the dispersion of unwanted substances into the municipal waste stream. This contributes to the protection of human health and the environment.

Please be informed that a fine may be imposed for illegal dispoal of electrical and electronic products via the general municipal waste stream. In order to facilitate separate disposal and environmentally sound recycling, arrangements have been made for local collection and recycling. In case your electrical and electronic products need to be disposed of, please refer to your supplier or the contractual agreements that your company has made upon acquisition of these products.

For countries outside the European Union

Disposal of electrical and electronic products in countries outside the European Union should be done in line with the local regulations. If no arrangement has been made with your supplier, please contact the local authorities for further information.

Battery disposal information

Defect or exhausted batteries should never be disposed of as municipal waste. Return old batteries to the battery supplier, a licensed battery dealer or a designated collection facility. Do not incinerate batteries.

Regulatory information — Europe

Declaration of conformity

български
С настоящото “Fortinet” декларира, че този “870i” е в съответствие със съществените изисквания и други приложими разпоредби на Директивата за радиосъоръжения 2014/53/ЕС.

Česky
“Fortinet” tímto prohlašuje, že tento “870i” je ve shodě se základními požadavky a dalšími příslušnými ustanoveními směrnice 2014/53/EU.

Dansk
Undertegnede “Fortinet” erklærer herved, at følgende udstyr “870i” overholder de væsentlige krav og øvrige relevante krav i direktiv 2014/53/EU.

Deutsch
Hiermit erklärt “Fortinet”, dass sich das Gerät “870i” in Übereinstimmung mit den grundlegenden Anforderungen und den übrigen einschlägigen Bestimmungen der Richtlinie 2014/53/EU befindet.

Eesti
Käesolevaga kinnitab “Fortinet” seadme “870i” vastavust direktiivi 2014/53/EL põhinõuetele ja nimetatud direktiivist tulenevatele teistele asjakohastele sätetele.

English
Hereby, “Fortinet”, declares that this “870i” is in compliance with the essential requirements and other relevant provisions of Directive 2014/53/EU.

Español
Por medio de la presente “Fortinet” declara que el “870i” cumple con los requisitos esenciales y cualesquiera otras disposiciones aplicables o exigibles de la Directiva 2014/53/UE.

Ελληνική
ΜΕ ΤΗΝ ΠΑΡΟΥΣΑ Η “Fortinet” ΔΗΛΩΝΕΙ ΟΤΙ “870i” ΣΥΜΜΟΡΦΩΝΕΤΑΙ ΠΡΟΣ ΤΙΣ ΟΥΣΙΩΔΕΙΣ ΑΠΑΙΤΗΣΕΙΣ ΚΑΙ ΤΙΣ ΛΟΙΠΕΣ ΣΧΕΤΙΚΕΣ ΔΙΑΤΑΞΕΙΣ ΤΗΣ ΟΔΗΓΙΑΣ 2014/53/ΕΕ.

Français
Par la présente “Fortinet” déclare que l’appareil “870i” est conforme aux exigences essentielles et aux autres dispositions pertinentes de la directive 2014/53/UE.

Hrvatski
Ovime, “Fortinet”, izjavljuje da je ovaj “870i” u skladu s bitnim zahtjevima i drugim relevantnim odredbama Smjernice o radijskoj opremi 2014/53/EU.

Italiano
Con la presente “Fortinet” dichiara che questo “870i” è conforme ai requisiti essenziali ed alle altre disposizioni pertinenti stabilite dalla direttiva 2014/53/UE.

Latviski
Ar šo “Fortinet” deklarē, ka “870i” atbilst Direktīvas 2014/53/ES būtiskajām prasībām un citiem ar to saistītajiem noteikumiem.

Lietuvių
Šiuo “Fortinet” deklaruoja, kad šis “870i” atitinka esminius reikalavimus ir kitas 2014/53/ES Direktyvos nuostatas.

Malti
Hawnhekk, “Fortinet”, jiddikjara li dan “870i” jikkonforma mal-ħtiġijiet essenzjali u ma provvedimenti oħrajn relevanti li hemm fid-Dirrettiva 2014/53/UE

Magyar
Alulírott, “Fortinet” nyilatkozom, hogy a “870i” megfelel a vonatkozó alapvetõ követelményeknek és az 2014/53/EU irányelv egyéb elõírásainak.

Nederlands
Hierbij verklaart “Fortinet” dat het toestel “870i” in overeenstemming is met de essentiële eisen en de andere relevante bepalingen van richtlijn 2014/53/EU.

Polski
Niniejszym, “Fortinet” deklaruje, ze “870i” jest zgodny z wymaganiami i innymi warunkami Dyrektywy 2014/53/UE.

Português
“Fortinet” declara que este “870i” está conforme com os requisitos essenciais e outras disposições da Directiva 2014/53/UE.

Rumunski
Prin urmare, “Fortinet”, declară că acest “870i” respectă cerințele esențiale și alte prevederi relevante ale Directivei privind echipamentele radio (2014/53 /UE).

Slovensko
“Fortinet” izjavlja, da je ta “870i” v skladu z bistvenimi zahtevami in ostalimi relevantnimi določili direktive 2014/53/EU.

Slovensky
“Fortinet” týmto vyhlasuje, že “870i” spĺňa základné požiadavky a všetky príslušné ustanovenia Smernice 2014/53/EU.

Suomi
“Fortinet” vakuuttaa täten että “870i” tyyppinen laite on direktiivin 2014/53/EU oleellisten vaatimusten ja sitä koskevien direktiivin muiden ehtojen mukainen.

Svenska
Härmed intygar “Fortinet” att denna “870i” står I överensstämmelse med de väsentliga egenskapskrav och övriga relevanta bestämmelser som framgår av direktiv 2014/53/EU.

Intended use

These phones are designed for use with a Fortinet IP DECT phone network. Any other use is considered unintended use.

The product transmits within the frequency ranges and less than or equal to the power listed below:
1880–1900 MHz: less than 24 dBm

CE

Fortinet, Inc.
899 Kifer Road
Sunnyvale, CA 94086

Regulatory information — United States

Interference information

This device complies with Part 15 of the FCC Rules. Operation is subject to the following two conditions: (1) this device may not cause harmful interference, and (2) this device must accept any interference received, including interference that may cause undesired operation.

NOTE: This equipment has been tested and found to comply with the limits for a Class B digital device, pursuant to Part 15 of the FCC Rules. These limits are designed to provide reasonable protection against harmful interference in a residential installation. This equipment generates uses and can radiate radio frequency energy and, if not installed and used in accordance with the instructions, may cause harmful interference to radio communications. However, there is no guarantee that interference will not occur in a particular installation. If this equipment does cause harmful interference to radio or television reception, which can be determined by turning the equipment off and on, the user is encouraged to try to correct the interference by one or more of the following measures:

- Reorient or relocate the receiving antenna.
- Increase the separation between the equipment and receiver.
- Connect the equipment into an outlet on a circuit different from that to which the receiver is connected.
- Consult the dealer or an experienced radio/TV technician for help.

Modifications not expressly approved by Fortinet could void the user's authority to operate the equipment. Privacy of communication may not be ensured when using this equipment.

Exposure to Radio Frequency (RF) signals

This product is a radio transmitter and receiver. It is designed and manufacturer not to exceed the emission limits for exposure to radio frequency (RF) energy set by the Federal Communications Commission (FCC) of the U.S. Government. These limits are part of comprehensive guidelines and establish permitted levels of RF energy for the general population. The guidelines are based on the safety standards previously set by both U.S. and international standards bodies. These standards include a substantial safety margin designed to assure the safety of all persons, regardless of age and health. This device and its antenna must not be co-located or operating in conjunction with any other antenna or transmitter.

This product has been shown to be capable of compliance for localized specific absorption rate (SAR) for uncontrolled environment/general population exposure limits specified in ANSI/IEEE Std. C95.1-1992 and had been tested in accordance with the measurement procedures specified in FCC/OET Bulletin 65 Supplement C (2001) and IEEE 1528-2003.

For body worn operation, this handset has been tested and meets the FCC RF exposure guidelines when used with the (Fortinet) accessories supplied or designated for this product. Use of other accessories may not ensure compliance with FCC RF exposure guidelines.

Regulatory information — Canada

Interference information

Operation is subject to the following two conditions: (1) this device may not cause harmful interference, and (2) this device must accept any interference received, including interference that may cause undesired operation.

Privacy of communications may not be ensured when using this equipment.

Exposure to Radio Frequency (RF) signals

This base station is a radio transmitter and receiver. It is designed and manufactured not to exceed this emission limit for exposure to radio frequency (RF) energy set by the Ministry of Health (Canada), Safety Code 6. These limits are part of comprehensive guidelines and established permitted levels of RF energy for the general population. These guidelines are based on the safety standards previously set by international standard bodies. These standards include a substantial safety margin designed to assure the safety of all persons, regardless of age and health.

This device and its antenna must not be co-located or operating in conjunction with any other antenna or transmitter.

This device has been shown to be capable of compliance for localized specific absorption rate (SAR) for uncontrolled environmental/general public exposure limits specific in ANSI/IEEE C95.1-1992 and had been tested in accordance with the measurement procedures specified in IEEE 1528-2003.

This Class B digital apparatus complies with Canadian ICES-003.

CET appareil numérique de la classe B est conforme á la norme NMB-003 du Canada.

This product meets the applicable Industry Canada technical specifications. / Le présent matériel est conforme aux specifications techniques applicables d'Industrie Canada.

Warranty

This phone is covered by a one-year hardware warranty against manufacturing defects as set forth in the EULA.

www.fortivoice.com/support

For warranty service:

- **In North America**, please call 1-866-648-4638 for further information.
- **Outside North America**, contact your sales representative for return instructions.

You will be responsible for shipping charges, if any. When you return this telephone for warranty service, you must present proof of purchase.